International Journal for Research in Engineering Application & Management (IJREAM)
ISSN : 2454-9150 Vol-04, Issue-10, Jan 2019

Design of Steering and Braking System for a Solar Car

[1]Ganesh H. Kawade, [2]Rahul D. Pharande, [3]Sagar B. Patil

[1,2,3]Assitant Professor, Automobile Engineering Dept, D Y Patil School of Engg. Academy, Ambi Pune, India.

[1]ganesh.kawade@dyptc.edu.in, [2]rahul.pharande@dyptc.edu.in, [3]sagar.patil@dyptc.edu.in

Abstract **Solar vehicle is the future of the automobile industry. The main advantage of solar vehicle is that they are pollution free and are very economical. Since they cause no pollution they are very eco-friendly. By harvesting the renewable sources of energy like the solar energy we are helping in preserving the non-renewable sources of energy. Research idea is developing a solar powered vehicle which could be used for intra-city transportation purpose. This vehicle replaces local public transport vehicle. Basic requirements of local public transport vehicle, which should carry 5 person & luggage, Vehicle must have top speed 30 km/hr. In single charge it should cover 50 km distance; it should have grade ability of 15 % (8 degree).**

This research work deals with a detailed study on the control system of solar car which is related to steering and braking system on the basis of solar car power. This work, focused on design consideration of control system basis on solar car power. Design parameters of steering system such selection of steering system, Steering column design, steering knuckle, steering geometry parameters, steering ratio and turning radius etc. Braking system design includes selection of braking system and design of brake system parameters. Brake System is designed for various parameters like kinetic energy of vehicle, stooping distance, and braking efficiency in terms of skidding of car. Individual system component is then designed for required specification and manufactured. Finally designed control system of solar car tested for its designed requirements.

Keywords - Braking System, Design of control system, Performance Parameter, Steering System, Solar car Power

I. INTRODUCTION

India along with the world is facing 'Energy Crisis. There is a significant gap in the demand and supply for electricity. Day by day as our country progresses towards development, this gap is increasing and tackling this situation is very important to continue our country's ascending path. In order to meet this situation a number of options are being considered with a large focus on renewable energy research and development. The options considered are solar energy, biogas, wind energy, geothermal energy etc. Contrasting to the fossil fuels that we consume and use on a daily basis, solar energy does not fabricate the excessively injurious pollutants that are liable for the green house which is known to lead to global warming. In day to day life the use of automobile sector is increasing for transportation and other purpose due to which environmental pollution is also increasing. To reduce the pollution and global warming need to identify another source of energy for vehicle. The sun is main source of Energy to carry out this demand. It is quite necessary to make a new exploration of natural resource of energy and power.

The basic principle of the solar car is to use the energy which is stored in the batteries, which are charged by solar panels. The solar cells collect a portion of the sun's energy and store it into the batteries of the solar car. Before that happens, power trackers converts the energy collected from the solar array to the proper system voltage, so that the batteries and the motor can use it. This type of car is pollution free because there is no any exhaust from the car and no any fuel cost because the energy available from the sun is free. This also helps to save the non-renewable sources of the energy. Solar energy is being used to produce electricity through sunlight. With this aim we designed the solar car which will travel at a speed of 25-30 km/h and run 40-50 km at one charged. The car will have a capacity of four passengers and driver.

 DOI : 10.18231/2454-9150.2018.1328

The car is mainly divided into four sections for design and manufacturing point of view. Each section is related to on different systems of vehicle. In this work we have developed the design process for control system of solar vehicle. In control system, the main systems are braking and steering system. The steering is the applied on the collation of component, linkages which transfer the motion from the steering wheel to the front wheels. Considering the weight of passenger and other weight, the car having weight about 730kg and space occupied by it is minimum. Considering all parameters, it has been suggested to use rack and pinion type of steering system. Brakes reduce the speed of the car. While designing the braking system, the total weight of the car and available space is considered. For applying the brakes, the minimum efforts should be required to the driver. For that purpose, it is suggested to use hydraulic disc brakes for front wheels and drum brakes for rear wheels. With the help of this paper our aim to showcase the design consideration related to a steering and braking system for solar car.

II. TECHNICAL SPECIFICATION OF SOLAR CAR

2.1 General design consideration of car

I] Passenger capacity (Including driver) - 5 persons

II] Maximum Speed - 30Kmph

III] Gradient – 15%

IV] Once charged car travel - 50Km

V] Total weight of the car = Total Passenger weight + Curb weight

Curb weight = 380 kg (Assume)

Passenger weight = Considering weight of passenger is 70 kg.

= 70*5

= 350kg

Total car weight = 350+380

= 730kg

VI] Overall dimensions:

a) Wheel base = 2000mm

b) Wheel track = 1500mm

c) Overall length = 3000mm

d) Height of vehicle = 550mm

2.2 Power calculation of solar car

The power needed to propel a vehicle can be determined by combining the forces that needs to be applied to the vehicle to move it. The drive torque generated by the motor for the wheels produces a drive force at the tire/road contact - it is the drive force that moves the vehicle. At the design stage it's easier to frame the calculation around this drive force rather than the drive torque. Thus the calculations in this section start by determining the various resistances offered by a car. Size of this drive force, and given a set of speed at which the vehicle should move, the drive power is found. The total drives force acting on the car to make it move need to calculate various forces/ resistances offered by vehicle.

2.2.1 Rolling Resistance

The resistance offered by vehicle due to the contact between road surface and tyre is called as rolling resistance.

$Rr = KrW$

Where:

Kr – Constant of rolling resistance, 0.015 for selected solar car

W – Mass of the vehicle. 7161.3 N

$Rr = 0.015 * 7161.3$

$Rr = 107.41$ N

2.2.2 Air Resistance

This is the resistance offered by air due to the movement of vehicle is called as air Resistance.

$$Ar = KaAV^2$$

Where:

Ka – Coefficient of air 0.031

A - Projected frontal area of car 1.2 * 1.2 = 1.44 m^2

V - Velocity of the vehicle= 30 km/h

$Ar = 0.031 * 1.44 * (30)^2$

$Ar = 394.12$ N

2.2.3 Gradient Resistance

The component of the weight of the vehicle parallel to the gradient or slope on which it moves is called grade resistance.

$Rg = W \sin\theta$

Where:

W – Total weight of vehicle. N

θ – Inclination of the slope to the horizontal (Assume 8^0 for Solar car)

$Rg = 7161.3 * \sin 8$

Rg= = 996.66 N

2.2.4 Power of solar car

Total power required to propel the solar car is calculated as follows.

Total propulsive power = [Rolling resistance + Air resistance +Gradient resistance]

$Ft = 107.41 + 394.12 + 996.66$

$Ft = 1498.21$ N

Power required driving the vehicle at V speed;

$P = Ft*V$

$P = 1498.21 * 8.33$

$P = 12.48$ kW

 DOI : 10.18231/2454-9150.2018.1328

III. DESIGN OF STEERING SYSTEM FOR SOLAR CAR

Ackerman steering geometry is a geometric arrangement of linkages in the steering of a car or other vehicle designed to solve the problem of wheels on the inside and outside of a turn needing to trace out circles of different radii. Schematic layout of Ackerman steering geometry is shown in figure 2.

Ackerman geometry is used to avoid the need for tires to slip sideways when following the path around a curve. The geometrical solution to this is for all wheels to have their axles arranged as radii of circles with a common centre point. As the rear wheels are fixed, this centre lies on a line extended from the rear axle. Intersecting the axes of the front wheels on this line as well requires that the inside front wheel is turned, when steering, through a greater angle than the outside wheel.

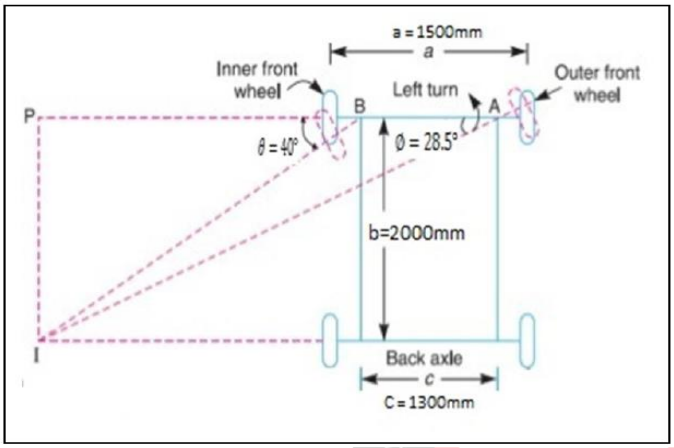

Figure- 1: Ackerman Steering Geometry [5]

Following equation is used to calculate the inner and outer angle of steering wheel.

$$\text{Cot } \Phi - \text{cot } \Theta = \frac{c}{b}$$

Where,

Φ = Outer wheel steering angle,

Θ = Inner wheel steering angle.

c = Distance between the pivots of front axle, mm.

b = wheelbase, mm.

a = Wheel track, mm

Consider the Inner wheel steering angle = Θ = 40° (assume)

$$\text{Cot } \Phi - \text{cot } 40 = \frac{1.3}{2}$$

$$\Phi = 28.5°$$

Turning radius of inner front wheel

$$\text{Rif} = \frac{b}{\sin\Theta - (a-c)/2}$$

$$= \frac{2000}{\sin 40 - (1500-1300)/2}$$

$$\text{Rif} = 3.011 \text{ m}$$

Turning radius of outer front wheel

$$\text{Rof} = \frac{b}{\sin\Theta + (a-c)/2}$$

$$= \frac{2000}{\sin\Theta + (1500-1300)/2}$$

$$= \text{Rof} = 4.288 \text{ m}$$

Form Standard table Assume Maximum rack travel = 68.4 mm (At 440 of steering wheel rotation) so number of teeth on pinion = 6 Nos.

Effort required to steer the vehicle = 45% of total weight of the vehicle * coefficient of friction

$$= 7161.3 \frac{45}{100} * 0.6$$

$$= 3222.58 \text{ N}$$

Total load on front wheel = 3222.58N

Radius of steering wheel= 200 mm ……. (Assume)

Dia. of pinion = 16mm

$$\frac{\text{Radius of Steering Wheel}}{\text{Radius of Pinion}} = \frac{\text{Total Load on Front Wheel}}{\text{Input Effort given by driver}}$$

$$\frac{200}{8} = \frac{3222.58}{\text{Input Effort given by driver}}$$

Input effort given by driver = 128.90 N

3.1 Steering Column Design

The automotive steering column is a device intended primarily for connecting the steering wheel to the steering mechanism by transferring the driver's input torque from the steering wheel. As per the ergonomic considerations, steering wheel position in such a way that head and neck should completely rest on the driver seat. Inclination of steering column to vertical is 70°. The length of column from universal joint to steering wheel is 60 cm. Fig.3 shows the seating position of driver and shows angle of steering column to horizontal.

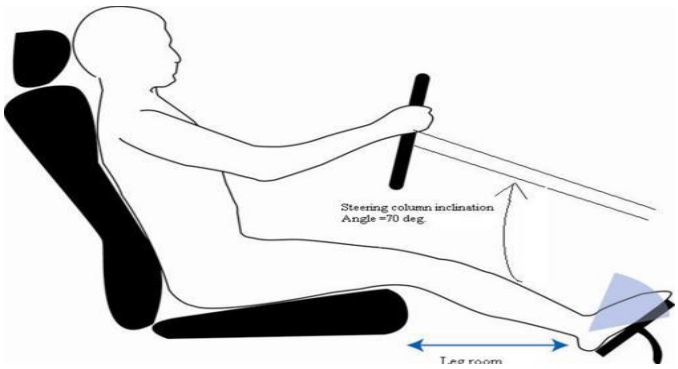

Figure - 2: Seating position of driver [6]

Now calculate the bending moment of steering column.

i) Bending moment of steering column = Load on steering wheel × length of steering wheel from fixed point

 DOI : 10.18231/2454-9150.2018.1328

ii) Load on steering wheel = Input movement given by driver = 128 N

iii) Length of steering wheel from fixed point = 600 mm

So, Bending moment of steering column = 128 × 600 = 76800 N-mm

3.2 Steering Geometry Parameters

Steering geometry parameters such as kingpin inclination angle, caster angle, camber angle, toe angle calculated from data based on selected model. Values of these steering geometry parameters are represented in following table.

Table - 1: Steering Geometry Parameters

Sr. No.	Geometry Parameters	Values
1.	Steering Ratio	17:1
2.	Caster	1°15''
3.	Camber	3°25''
4.	Toe-In	2 - 4 mm
5.	King pin Inclination	12°

IV. DESIGN OF BRAKING SYSTEM FOR SOLAR CAR

It has been decided to use hydraulic disc brakes at front and drum brakes at rear. The main reasoning behind this is that it is a less complicated system and requires less maintenance than mechanical brakes.

4.1 Brake system Design

Assume Top speed of vehicle = 30 km/hr.
Total mass of vehicle with driver = 730kg.

4.1.1 Kinetic Energy of Vehicle

$$KE = \frac{1}{2} mv^2$$

$$KE = \frac{1}{2} \times 730 \times (8.33)2$$

$$KE = 2532694 \text{ J}$$

4.1.2 Stopping distance:

$$V^2 = U^2 + 2gs$$

Where:

U = Initial vehicle speed (m/s)
V = Final speed (m/s)
g = Deceleration due to gravity (9.81 m/s)
s = Stopping distance (m)

If the final speed of vehicle is zero i.e. V =0

$$S = \frac{U^2}{2g}$$

$$S = \frac{U^2}{2 \times 9.81}$$

To convert km/h to m/s;

U (m/s) = 1000/ 60× 60 U
= 0.28 U (km/h)
$S = 0.004\ U^2$ (m)
$S = 0.004 \times 30^2$
S = 3.6 m

4.1.3. Average Braking Force:

$$F = \frac{mV^2}{2S}$$

Where,

m = Mass of the vehicle, Kg.
v = Final speed of the vehicle m/s.
S = Stopping distance m.

$$F = \frac{730 \times 8.33^2}{2 \times 3.6}$$

F = 7035.26 N

4.1.4. Braking Efficiency:

Braking efficiency = Braking force / weight of the vehicle ×100

Braking efficiency = 7035.26/ 730× 9.81

Braking efficiency = 98.24

4.1.5. Deceleration:

Dx = 0.5 g

$Dx = 4.90\ m/S^2$

4.1.6 Stopping Time:

$V = U - D_X \times t$

Where,

D_x – Deceleration m/s^2
V = Initial speed of the vehicle m/s.
U = Final speed, m/s.
t = Stopping time, sec.

0 = 8.33-4.90 × t
t = 2sec

4.2 Total Weight of Vehicle Including Driver (W):

W = 730×9.81 = 7161.3 N

Static Weight Distribution: Passenger seating capacity is two at front and three at rear side. Also two batteries are mounted at front as well as rear. So weight on rear axle is more than the front. From this it has been considered 45% weight on front axle and 55% weight on rear axle.

1. On front axle = 8829× 0.45 = 3973.05N
2. On rear axle = 8829 ×0.55= 4855.95 N

4.2.1. Dynamic Weight Transfer:

$W_D = (h/L) * (W/g) \times DX$

Where:

W_D - Dynamic weight transfer, N.
h - Distance of centre of gravity, m.
L - Wheelbase, m.
W - Weight of the vehicle, N.
g - Acceleration due to gravity m/s^2
D_x - Deceleration m/s^2

$W_D = (0.52755/2) \times (7161.3/9.81) \times 4.90$

$W_D = 943.523$ N

4.2.2. In Dynamic Condition (while braking) Vertical Load (weight) on Axles:

1. Front Axle = Static Weight + W_D
= 3973.05 + 943.523
= 4166.10 N
2. Rear Axle = static weight - W_D
= 3973.05 – 943.52
= 2279.05 N

4.2.3. Percentage Load Transfer While Braking:

1. Front = $\frac{4166.10}{7161.3}$
= 58.17 %
2. Rear = $\frac{2279.05}{7161.3}$
= 31.82%

 DOI : 10.18231/2454-9150.2018.1328

4.2.4. Required Braking Force at Front Wheel:

$F_F = F \times$ % wt. transfer at front axle

F_F = Average braking force, N

$F_F = 7035.26 \times 0.58$

$F_F = 4080.45$ N

4.2.5 Required Braking Force at Rear Wheels:

$R_R = F \times$ % weight transfer at rear axle

$R_R = 7035.26 \times 0.3$

$R_R = 2180.93$N

4.2.6 Braking Torque Required for Single Front Wheel: ($TF_)$

$$T_F = \frac{Brake\ Force}{2} \times \mu \times \text{Radius (R effective)}$$

But R effective (tire) = Radius of Tire -Tire trade wear constant

$T_F = 0.28 - 0.004$

$T_F = 0.276$m$T_F = 4080.45/2 \times 0.7 \times 0.276$

$T_F = 394.17$Nm

4.2.7 Braking Torque Required for Single Rear Wheel: (T_R)

$T_R = 2180.93/2 \times 0.7 \times 0.276$

$T_R = 210.68$Nm

V. CALCULATIONS OF BRAKE DESIGN PARAMETERS

Force Applied to the Pedal Pad by the Driver = 200 N (Assumed)

Pedal Ratio = 5:1

Force Output of the Brake Pedal Assembly (Fbp)

Fbp = 200 × 5 = 1000 N

5.1 Hydraulic Pressure Generated by the Master Cylinder (P_M):

Effective area of the Cylinder Hydraulic piston (A_M) $A_M = \frac{\pi}{4} \times 20 \times 2 = 314.46$mm²

The Force output of the brake pedal assembly (F_B)

(F_B) = 1000N

$$P_M = F_B / A_M$$

Where,

P_M = Pressure generated by the master cylinder, N/ mm^2

F_B = Brake force, N.

A_M = Effective area of the Cylinder Hydraulic piston, mm²

$$P_M = \frac{1000}{314.46}$$

$P_M = 3.18$ N/mm^2

We Know Hydraulic Pressure Transmitted to the Caliper (P_C):

So, $PC = P_M$

5.2 Force Developed at the caliper (F_C):

Caliper Piston Diameter =20 mm

No of Pistons = 2

Effective Area of the Caliper Piston (A_C)

$(A_C) = \frac{\pi}{4} \times 20^2 \times 2$

$(A_C) = 628.31$mm²

$F_{C = PC} \times A_C$

$F_C = 3.18 \times \frac{\pi}{4} \times 20 \times 20 \times 2$

$F_C = 1998.05$ N

5.3 Clamping Force at One Caliper (F_{clamp}):

$F_{clamp} = F_C * \mu * 2$

Where,

F_C = Force developed at the caliper, N.

μ = Coefficient of friction.

$F_{clamp} = 1998.05 * 2 * 0.3$

$F_{clamp} = 1198.83$ N

VI. DESIGN OF DISC BRAKE

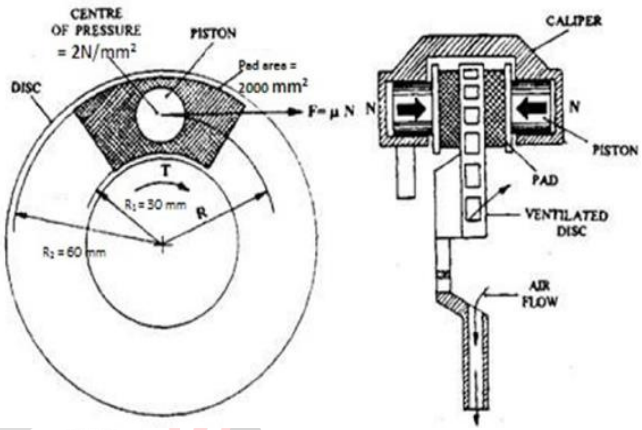

Figure - 3: Disc Brake Geometry

As shown in above fig. 3 as per the requirement of solar car contact area radius (Inner): 30mm and Contact area radius (Outer):60mm.

6.1 Vehicle load on the disc (FV)

= Total load of the vehicle * Axle weight ratio

= 7162N * 0.8

= 5730 N.

6.2 Area of contact (A)

A = Area of segment from Outer radius – Area of segment from Inner radius

A = 2120.57 mm^2

6.3 Maximum pressure acting on Disc (P_{max})

P_{max} = Force on the disc/ Area of the contact

$$P_{max} = \frac{1.5 * 7162}{2120.57}$$

$P_{max} = 2$ N/mm^2

6.4 Tangential Load acting on the disc due to brake pressure

Normal load on the disc (F_N)

$(F_N) = \frac{Pmax}{2}$ * Area of the brake pad

$(F_N) = \frac{Pmax\ 2}{2}$ *2120

$(F_N) =$ 2120 N

Tangential Load (F_T)

(F_T) = Normal load * Coefficient of friction

 DOI : 10.18231/2454-9150.2018.1328

$(F_T) = 2120 * 0.5$

$(F_T) = 1060$ N

Total load on disc while braking $(F_S) = F_N + F_T + F_V$

Total load on disc while braking $(F_S) = 8910$ N

6.5 Brake torque acting on the disc brake:

Brake torque on the disc = Total load on the disc * Radius of the rotor disc

= (8910 N) * 0.2 N-m

Brake torque on the disc = 1782 N-m

6.6 Master cylinder:

- Pressure generated by master cylinder = 3.18N/mm²
- Diameter of Master cylinder = 30mm

6.6 Piston caliper:

Single floating type

- Pressure = 2N/mm²
- Diameter = 20mm
- Area of brake pads = 2000mm²

VII. DESIGN OF DRUM BRAKE

Fig shows the forces acting on the internal expanding drum brake.

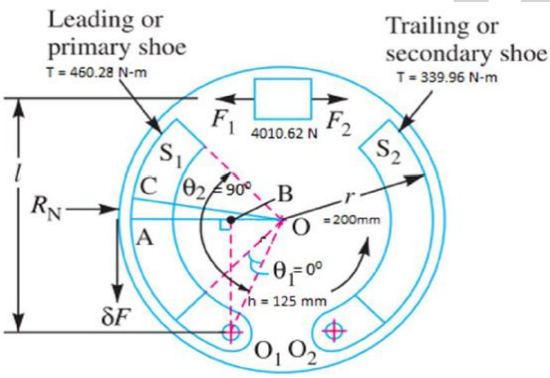

Fig - 4: Drum Brake Geometry

Let,

R^2 = Internal radius of the brake drum = 160mm

b = Width of the friction lining of shoe parallel to the axis of the brake drum = 40mm

h = Distance of the pivot from the axis of rotation = 125mm

P_{max} = Maximum normal intensity of pressure, N/mm²

μ = coefficient of friction = 0.4

F = Actuating force on the shoe, N

7.1 Braking torque (Tb) –

$$Tb = \frac{\mu P R*R b}{\sin\theta}[\cos\theta 1 - \cos\theta 2]$$

$$Tb = \frac{0.4 \times 1 \times 160 \times 160 \times 40}{\sin 90}[\cos 0 - \cos 90]$$

Tb = 409600 N.mm = 409.6 N-m

7.2 For Primary or Leading shoe

$$\text{Moment } (M_{NL}) = \frac{P b R h}{4 \sin\theta}[2(\theta_2 - \theta_1) - (\sin 2\theta_2 - \sin 2\theta_1)]$$

$$\text{Moment } (M_{NL}) = \frac{1 \times 40 \times 160 \times 125}{4 \sin 90}[2(1.5707 - 0) - (\sin 180 - \sin 0)]$$

Moment (M_{NL}) = 460280 N - mm = 460.28 N- m

$$\text{Moment } (M_{FL}) = \frac{\mu P max\ R}{4 \sin\theta}[4R(\cos\theta_1 - \cos\theta_2) - h(\cos 2\theta_1 - \cos 2\theta_2)]$$

$$\text{Moment } (M_{FL}) = \frac{0.4 \times 1 \times 40 \times 160}{4 \sin 90}[4 \times 160(\cos 0 - \cos 90) - 125(\cos 0 - \cos 180)]$$

Moment (M_{FL}) = 249600 N-mm = 249.6N-m

7.3 For Trailing Shoe (Left Hand Shoe)

$$\text{Moment } (M_{NT}) = \frac{P b R h}{4 \sin\theta}[2(\theta_2 - \theta_1) - (\sin 2\theta_2 - \sin 2\theta_1)]$$

$$\text{Moment } (M_{NT}) = \frac{P \times 40 \times 160 \times 125}{4 \sin\theta}[2(1.5707 - 0 - (\sin 180 - \sin 0)]$$

Moment (M_{NT}) = 628280 P

$$\text{Moment } (M_{FT}) = \frac{\mu P b R}{4 \sin\theta}[4R(\cos\theta_1 - \cos\theta_2) - h(\cos 2\theta_1 - \cos 2\theta_2)]$$

$$\text{Moment } (M_{FT}) = \frac{0.4 \times P \times 40 \times 160}{4 \sin 90}[4 \times 150(\cos 0 - \cos 90) - 125(\cos 0 - \cos 180)]$$

M_{FT} = 224000 P

Now calculate the Actuating force,

$$F = \frac{MNL + MFL}{L}$$

$$F = \frac{460280 + 249600}{177}$$

F= 4010.62N

7. 4: Actuating Force for Trailing Shoe

$$F = \frac{MNT + MFT}{L}$$

$$4010.62 = \frac{628280P + 224000\ P}{177}$$

P_{max} = 0.83N/ mm²

7.5 Braking Torque on Trailing Shoe

$$T_{BT} = \frac{u\ Pmax\ R\ b}{\sin\theta}[\cos\theta 1 - \cos\theta 2]$$

$$T_{BT} = \frac{0.4 \times 0.83\ R b}{\sin\theta}[\cos\theta 1 - \cos\theta 2]$$

T_{BT} = 339.968 N-m

7.6 Braking Torque Capacity

Tb = 409.6+ 339.96

Tb = 749.56 N.m

VIII. KNUCKLE DESIGN

Steering knuckle is that part which contains the wheel hub or spindle, and attaches to the suspension components. The wheel and tire assembly attach to the hub or spindle of the knuckle where the tire or wheel rotates while being held in a stable plane of motion by the knuckle or suspension assembly. The knuckle usually has a spindle onto which

 DOI : 10.18231/2454-9150.2018.1328

the brake drum or brake rotor attaches. The wheel or tire assembly then attaches to the supplied lug studs, and the whole assembly rotates freely on the shaft of the spindle.

1. Turning Radius = 4.2 m
2. Velocity = 30km/ hr = 8.33m/sec
3. Acceleration = 0.834m/sec²
4. Weight Distribution = 45:55
5. Total weight = 730 kg.

8.1 Bump Force

Total weight = 730kg.

Weight on front axle= 328.5kg.

Weight on rear axle= 401.5kg.

Weight on each front wheel= 164.25kg.

Bump Force at each front wheel = M.F.*Wt. act on one wheel

= 2*164.25 = 328.5kg.

Following figure shows the bump force is directly acts on the knuckle in upward direction and its value is 3285 N.

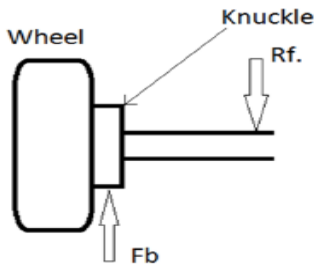

Figure - 5: Bump Force

8.2 Cornering Force (F_c)

$F_c = mv^2/2$

F_c = (730*(8.33)2)/2

F_c = 12060.45 N.

Now, Cornering force at one wheel = 12060.45/4

= 3015.11 N.

Fig. shows cornering force is acting on knuckle in horizontal direction and force value is 3015.11N.

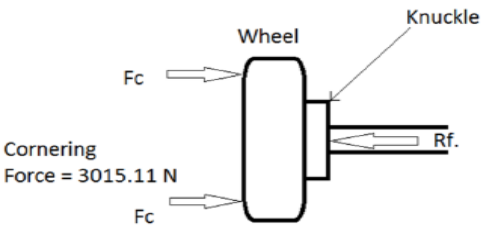

Figure – 6: Cornering Force

8.3 Acceleration Force (F_a)

F_a = m*a

F_a = 730*0.834

F_a = 608.82 N.

Fig. shows acceleration force is acting on knuckle in clockwise direction and its value is 608.82 N.

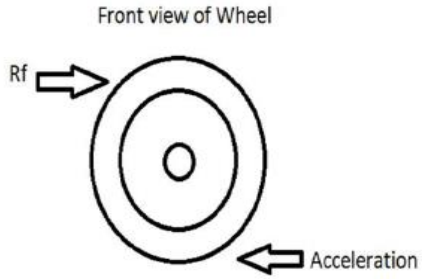

Figure – 7: Acceleration Force

8.4 Braking Force (F_b)

$F_b = (mv^2/2s)$

F_b = (730*(8.33)2)/(2*3.6)

F_b = 7035.26 N

So the brake force at one wheel = $\frac{Braking\ Force}{4}$

Braking force at one wheel = $\frac{7035.26}{4}$ = 1758.81 N.

Fig. shows, braking force directly acts on knuckle in horizontal direction and value is 1758.81N.

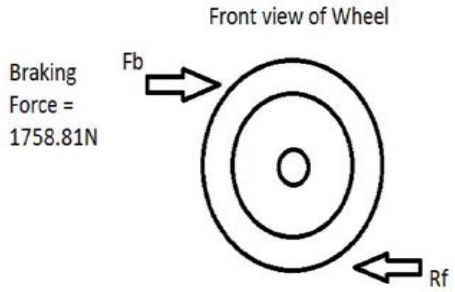

Figure - 8: Braking Force

IX. RESULTS AND DISCUSSION OF STEERING AND BRAKING SYSTEM

9.1 Steering Test:

After testing the steering system of a Solar Car following results were obtained regarding the steering ratio.

Table – 2: Steering Test Parameter

Sr. No.	Steering wheel turn in degree	Front wheel turn in degree
1	550°	32°

Steering ratio = $\frac{Steering\ wheel\ rotation\ in\ degree}{Front\ wHeel\ turn\ in\ degree}$

Steering ratio = $\frac{550}{32}$ = 17.18

Steering ratio = 17.18:1

From above result we find out the steering ratio is17.18:1 and its closely related to the designed value of steering ratio 17.3:1. From this result we can prove that designed system is safe related to steering ratio of solar car.

9.2 Turning Radius Test

After testing the steering system of a Solar Car related to the turning radius. When the car moved outside the track

 DOI : 10.18231/2454-9150.2018.1328

then it was found that 3.9 m as turning radius of solar car. But as per the design it is 4.2m which is more than the calculated value. Thus the variations in 0.3 m come due to the manufacturing error.

9.3 Braking Test

Braking test was carried out, to find out the stopping distance and stopping time at various solar car speeds. After performing the brake test following results were obtained.

Table – 3: Braking Test Parameter

Sr. No.	Speed of solar car (km/h)	Stooping Distance (m)	Stopping Time (Sec)
1	12	1	2
2	20	3	5
3	25	5	7

From above results it concluded that the braking system of vehicle satisfactory work. With the help of these results we can say that designed braking system of solar car suitable for the selected power requirement of solar car.

Skidding test of brake was found satisfactory result with the solar car. After application of brake checks the mark on the road if the scratch mark present on road then it is said to be the brakes are skidding.

X. Conclusion

The work was concerned with design of steering system and braking system of solar car. The effects of these systems were tested after designing for various performance parameters of the system. When we increased the steering ratio, efforts required to steer the vehicle is reduced. But number of rotations of steering wheel increased to negotiate the turn. Extra power is needed in case of power steering system. To fulfill the given objectives used rack and pinion steering system is suitable for our design. During testing it is known to us that given system are safe as per design considerations. Weight reduction is important factor in braking. If weight of vehicle is decreased, then required braking force also decreases. There is no need of power assisted braking system because at given speed of vehicle, hydraulic brake system is suitable. The following conclusions were made;

1. If weight of the vehicle changes, then power requirement changes. For same power increase in weight will decrease range of vehicle. Battery is major contributor of vehicle weight.
2. After testing the steering system of a Solar Car, we find out the steering ratio is17.18:1. This was closely related to the designed value of steering ratio 17.3:1.
3. Related to the Turning radius of solar car, when the car moved outside the track then it was found that 3.9 m as turning radius of solar car. But as per the design it is 4.2m which is more than the calculated value. This 0.3 m of error was come due to the manufacturing error.
4. This study shows the design parameters of braking system gives better performance related to the stooping time and stooping distance and skidding test of solar car.

References

[1] Boby George, Akhil T Benny, Albert John, Aswin Jose, Denny Francis, “Design and Fabrication of Steering and Bracking System for All Terrain Vehicle”, IJSER, Volume 7, Issue 3, March – 2016.
[2] Arsie, I., Rizzo, G., and Sorrentino, M., "Optimal Design and Dynamic Simulation of a Hybrid Solar Vehicle," SAE Technical Paper 2006-01-2997, 2006, doi: 10.4271/2006-01 - 2997.
[3] C. C. Chan, "The state of the art of electric and hybrid vehicles", Proc. IEEE, vol. 90, no. 2,pp. 247-275, 2002.
[4] Veronica Flores Sanchez; “Solar vehicle design for urban use,” Science Direct 10.5654/VPPC.2013.81656.
[5] Jinming Liu, Huei Peng, “Modeling and Control of Power-Split Hybrid Vehicle,” IEEE Technical Paper (2008), doi: 10.1109/TCST.2008.919447.
[6] Kwo Young, “Electric Vehicle Integration into Modern Power Networks”, Volume 2, Chapter 2, page no. 15-56,(2013) Springer 2009.
[7] N. K. Giri, “Automobile Mechanics”, Khanna publisher. Eoght Edition, 2015.
[8] E. D. Tate, “The Electrification of the Automobile: From Conventional Hybrid, to Plug-in Hybrids to Extended Range Electric Vehicles”, SAE Technical Paper Series (2008).
[9] Rudolf Limpert, hand book of — Brake design and safety.
[10] J. M. Miller, "Hybrid electric vehicle propulsion system architectures of the E-CVT type", IEEE Trans. Power Electron., vol. 21, no. 3, pp. 756-767, 2006.

 DOI : 10.18231/2454-9150.2018.1328